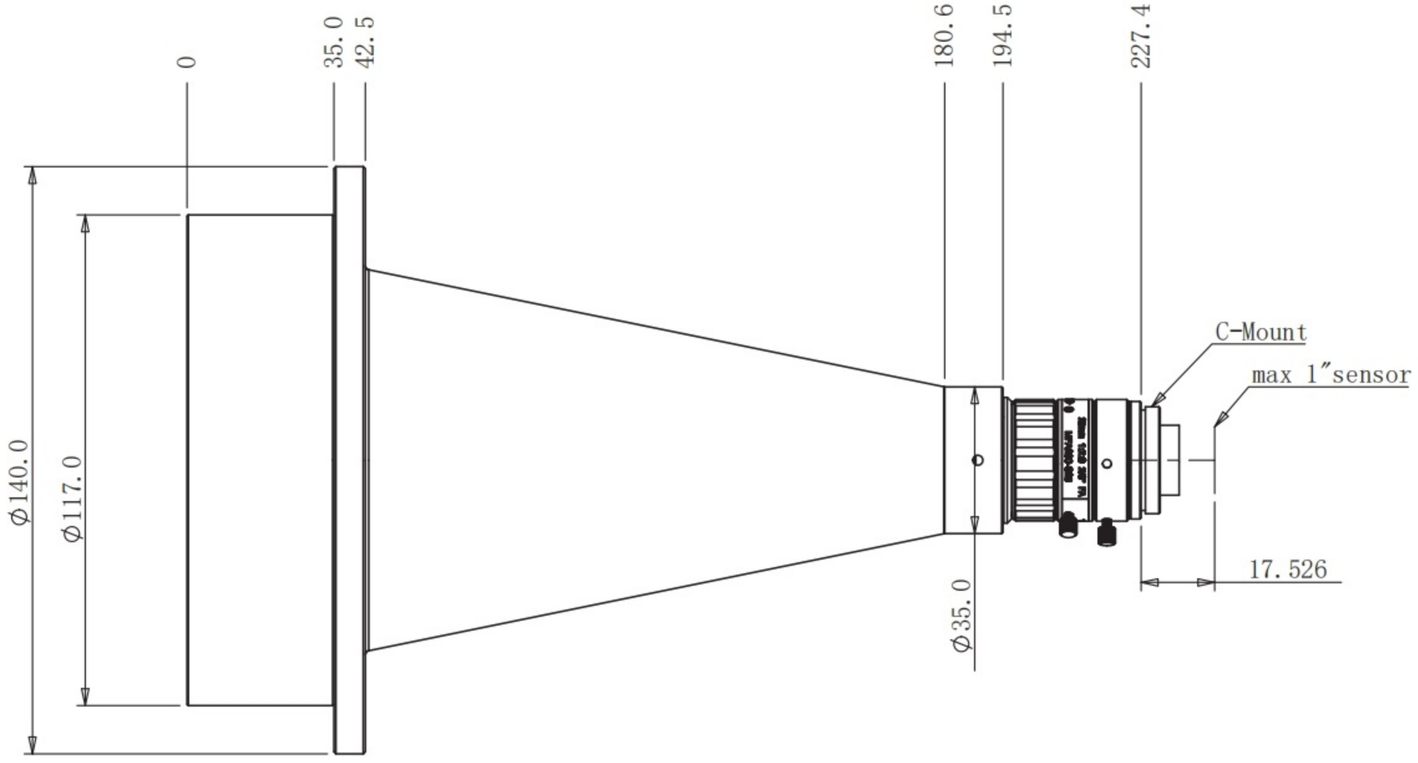
0
35.0
42.5
180.6
194.5
227.4
C-Mount
max 1″sensor
17.526
Φ140.0
Φ117.0
Φ35.0

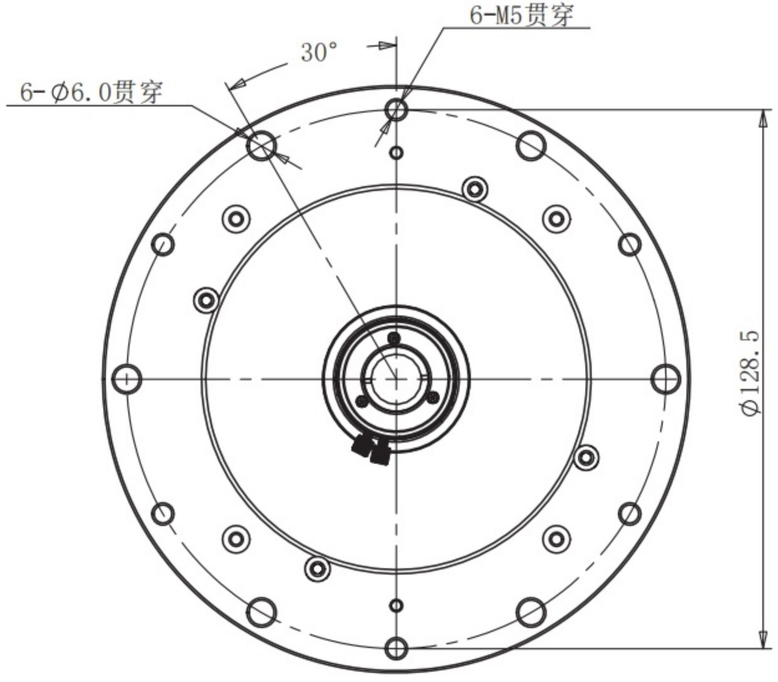
6-M5贯穿
30°
6-Φ6.0贯穿
Φ128.5