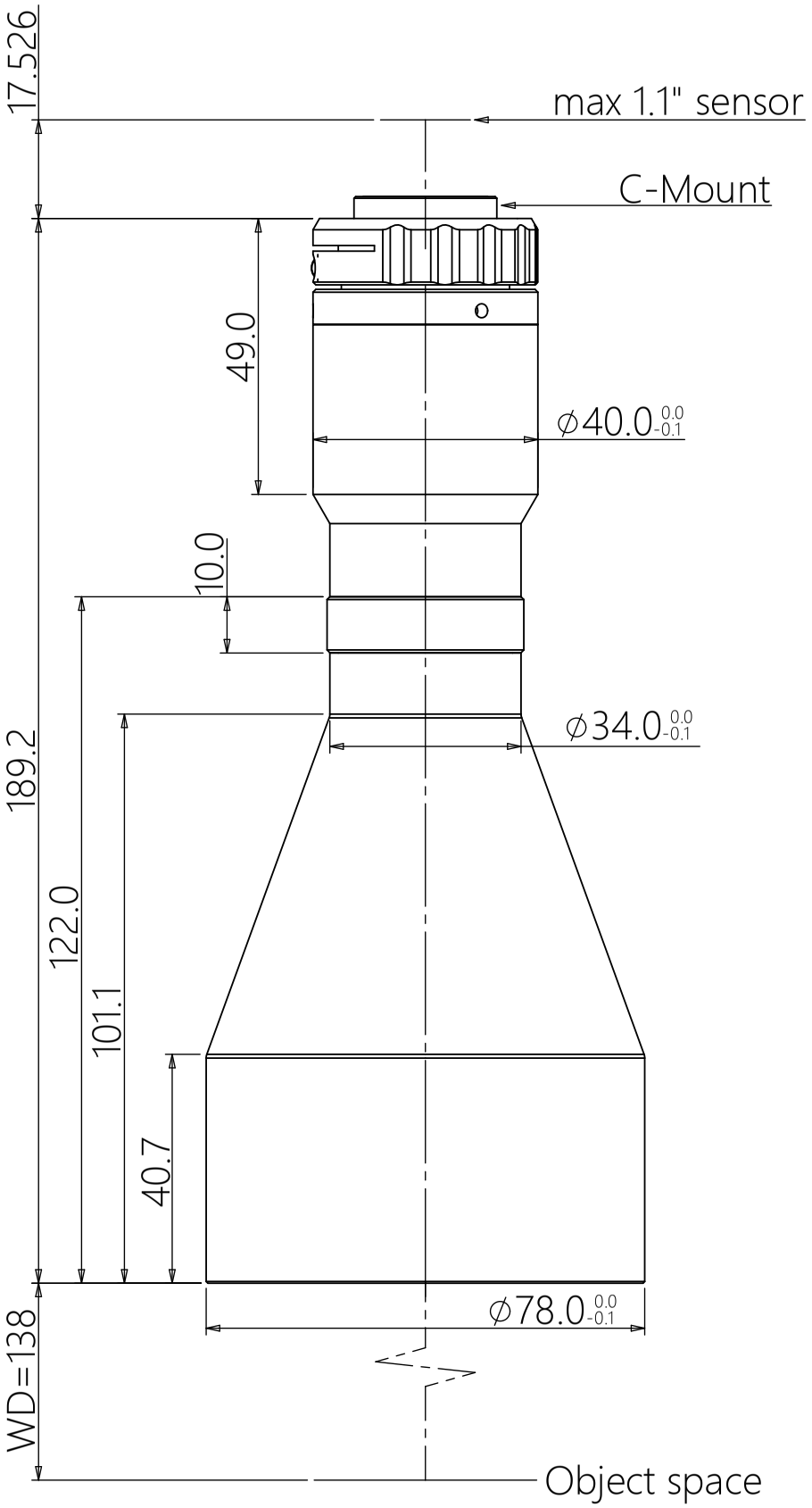
17.526
max 1.1" sensor
C-Mount
49.0
⌀40.0 0.0 -0.1
10.0
⌀34.0 0.0 -0.1
189.2
122.0
101.1
40.7
⌀78.0 0.0 -0.1
WD=138
Object space