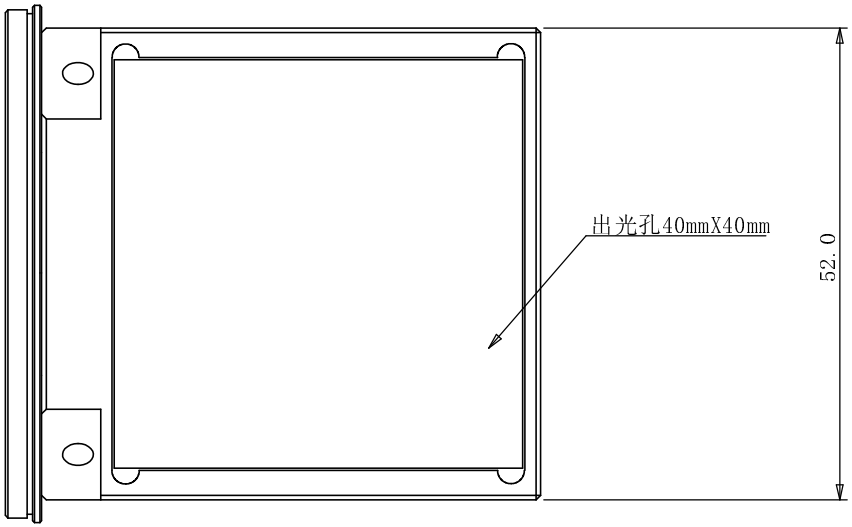
出光孔40mmX40mm
52.0

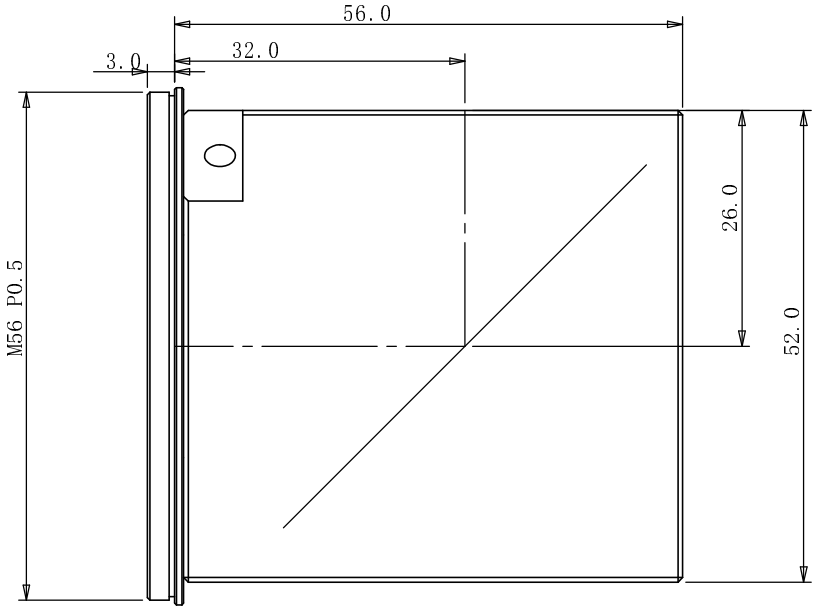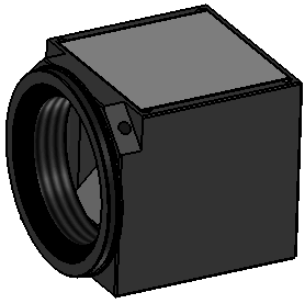
56.0
32.0
3.0
M56 P0.5
26.0
52.0